发行版本 Revision	修改内容 Description	制图 Drawing	日期 Date
A / 0	First release	Ding	2023.06.02

Pin Assignment
(Front View)

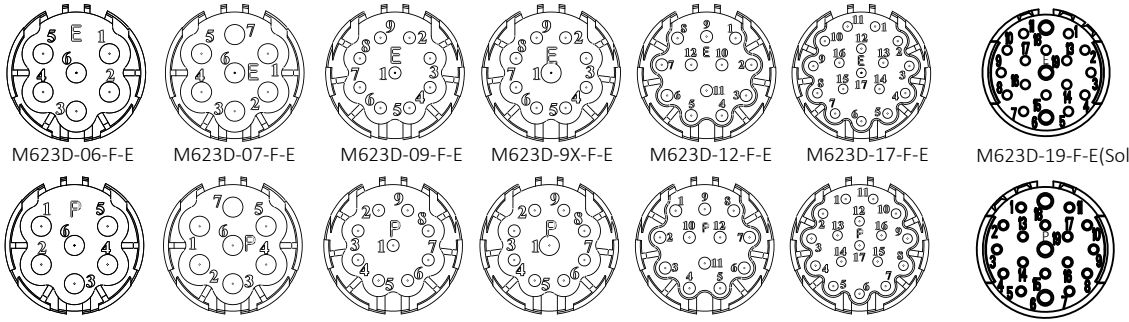

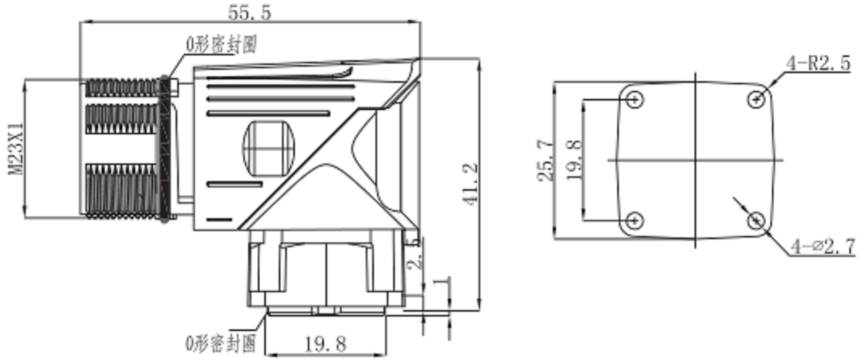

Technology parameter:

P/N	M623D-06-F	M623D-07-F	M623D-09-F	M623D-9X-F	M623D-12-F	M623D-17-F	M623D-19-F
NO.of contacts	6	7	9	9X	12	17	19
Rated current/voltage	20A/300V	20A/300V	8A/300V	8A/260V 20A/300V	8A/260V	8A/260V	8A/125V 20A/200V
Operation limit voltage(AC.V.rms)	250	250	200	200	200	200	200
Withstanding voltage (AC.V.rms) l minute	2500	2500	2500	2500	2500	2500	2500
Insulation resistance	≥100MΩ	≥100MΩ	≥100MΩ	≥100MΩ	≥100MΩ	≥100MΩ	≥100MΩ
Contact resistance	≤5mΩ	≤5mΩ	≤5mΩ	≤5mΩ	≤5mΩ	≤5mΩ	≤5mΩ
Cup mouth aperture	Ø2.4	Ø2.4	Ø1.3	Ø1.3 Ø2.4	Ø1.3	Ø1.3	Ø1.3
Contact diameter	Ø2	Ø2	Ø1	Ø1*8 Ø2*1	Ø1	Ø1	Ø1*16 Ø1.5*3

Mateial and specifications:

1. Coupling: Threaded coupling
2. Shell material:Zinc alloy with nikelplate
3. Insert material:PA66+GF
4. Contact material:copper,gold-plated
5. Termination:Crimp(19P is Solder)
6. Mating cycle:>500 cycles
7. Temperature range:-25℃~+85℃

仁昊伟业 RENHOTEC

RENHOTEC GROUP

客户料号 Cus' P/N		图号 File No.	M623D-xx-F-E/P	品名 Name	R/A M23 Female connector With flange,Crimp type		
未注公差 Unless Otherwise Specified		单位 Unit	mm	版本 Revision	A/0	图纸确认 APPROVAL	日期 Date
线性 Linear	0.5~6 ±0.1	比例 Scale	——	Third Angle Projection		绘图 Drawing	Ding 2023.06.02
	>6~30 ±0.2					审核 Checked	Jim 2023.06.02
	>30 ±2%	页码 Page	1 / 1			客户确认 Customer Approved	
角度 Angles	±3°						