仁昊伟业
RENHOTEC

Battery Storage Connector

https://www.renhotec.com | https://www.renhotecev.com

Renhotec Group Limited

仁昊伟业
RENHOTEC

Renhotec Group Limited

Head Office:

No.555, Wenhua Avenue, Hongshan District 430070, Wuhan City, Hubei, China.

Factory 1:

No.25, Ningjiang Road, Humen Town, Dongguan City, Guangdong Province, China.

Factory 2:

Building 5, Wanyang Zhongchuang City, Daze Park, Shenjiang Industrial Park, Daze Town, Xinhui District, Jiangmen City, Guangdong Province, China

Web: https://www.renhotecev.com

Tel: +86 15925121787

Email: sale@renhotec.com

Battery Storage Connector

Features:

12 Months Quality Insurance
Sample available for quality test
Touch Proof
360°Rotating Plug
Compactrobust Design
Various Termination Options
Three Color are available
Quick Lock and Press-to- Release Design.

产品参数 Product Parameters

额定电压	Rated Voltage	1000V DC
额定电流	Rated Current	From 60A to 350A MAX
耐电压	Withstand Voltage	2500V AC
绝缘电阻	Insulation Resistance	≥1000MΩ
线径范围	Cable Gauge	10-120mm²
接线方式	Connection Type	Terminal machine
插拔次数	Mating Cycles	>500
防护等级	IP Degree	IP67 (Mated)
工作温度	Operating Temperature	-40℃~+105℃
防火等级	Flammability Rating	UL94 V-0
芯数	Positions	1pin
外壳	Shell	PA66
端子	Contacts	Cooper alloy,Silver plating

订货号 Order P/N

RHT • P 006 • C10 • RD

- RD: Color:RD(Red),OG(Orange),BK(Black)
- C10: Connection Mode of Plug and Socket:
  Plug:C10/C16/C25/C35/C50/C70/C95
  Socket:T01(Busbar Lug)/T02(Outer Screw)/T03(Inner Screw)
- 006: Terminal Diameter:6/8mm²
- P: P:Plug,S:Socket
- RHT: Brand

产品尺寸 Battery Storage Connector Dimensions

Socket
插座

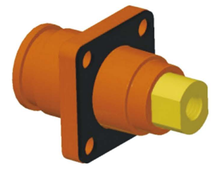

内螺纹连接 Inner Screw

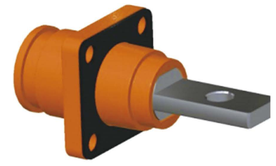

铜排连接 Busbar Lug

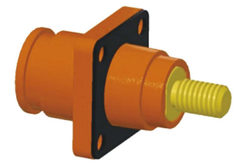

外螺纹连接 Outer Screw

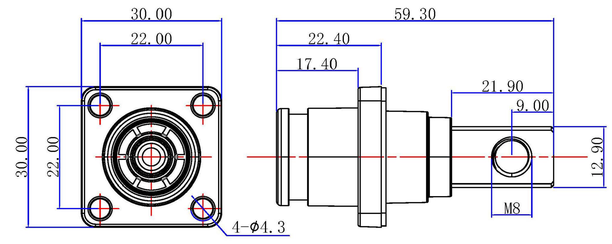

P/N	Wire Gauge	Rated Current	A	B
RHT.P006	10mm²	60A	5.00	7.00
RHT.P006	16mm²	100A	6.20	8.40
RHT.P006	25mm²	120A	7.80	10.60
RHT.P008	25mm²	120A	7.80	10.20
RHT.P008	35mm²	150A	9.00	11.70
RHT.P008	50mm²	200A	10.70	13.80
RHT.P012	70mm²	250A	13.00	16.30
RHT.P012	95mm²	350A	15.00	19.50
More styles are coming soon...				

Plug
插头

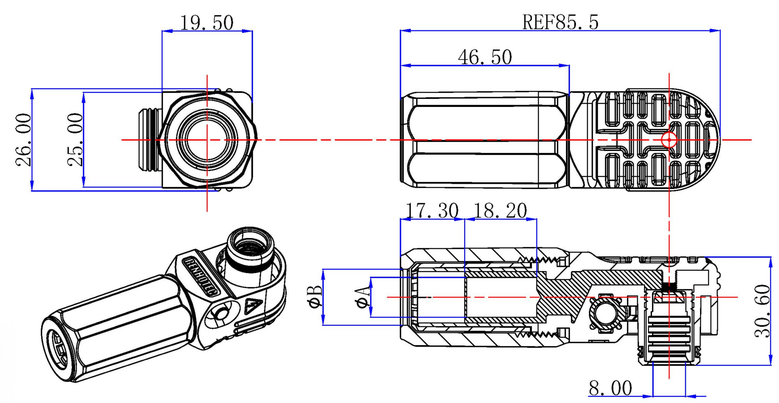

P/N	Wire Gauge	Rated Current	A	B
RHT.S006	10mm²	60A	5.00	7.00
RHT.S006	16mm²	100A	6.20	8.40
RHT.S006	25mm²	120A	7.80	10.60
RHT.S008	25mm²	120A	7.80	10.20
RHT.S008	35mm²	150A	9.00	11.70
RHT.S008	50mm²	200A	10.70	13.80
RHT.S012	70mm²	250A	13.00	16.30
RHT.S012	95mm²	350A	15.00	19.50
More styles are coming soon...				