Pin Layout:

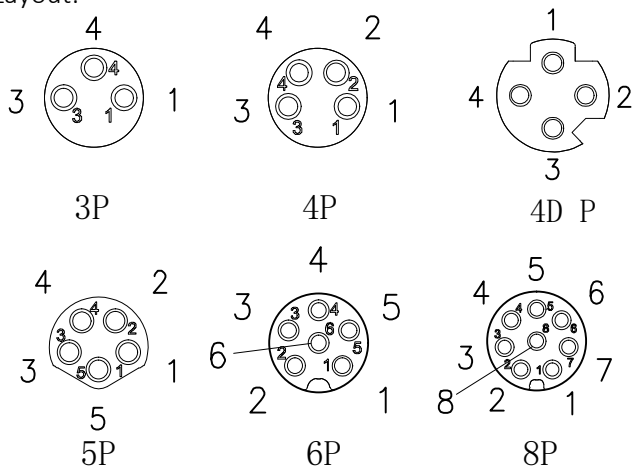

Specifications	Contacts	3	4	4D	5	6	8
	Rated current/ Rated voltage	3A/60V	3A/60V	4A/60V	3A/30V	1.5A/30V	1.5A/30V
	Rated pulse voltage	800V	800V	800V	800V	800V	800V
	Insulation resistance (MΩ)	⩾500	⩾500	⩾500	⩾500	⩾500	⩾500
	Contact resistance (mΩ)	≤ 5	≤ 5	≤ 5	≤ 5	≤ 5	≤ 5

PCB Layout:

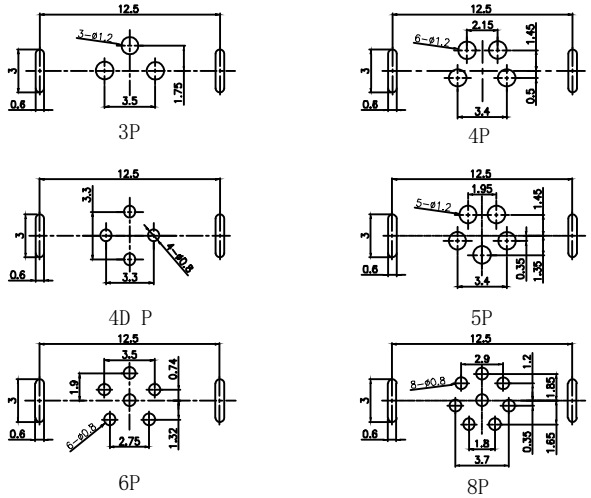

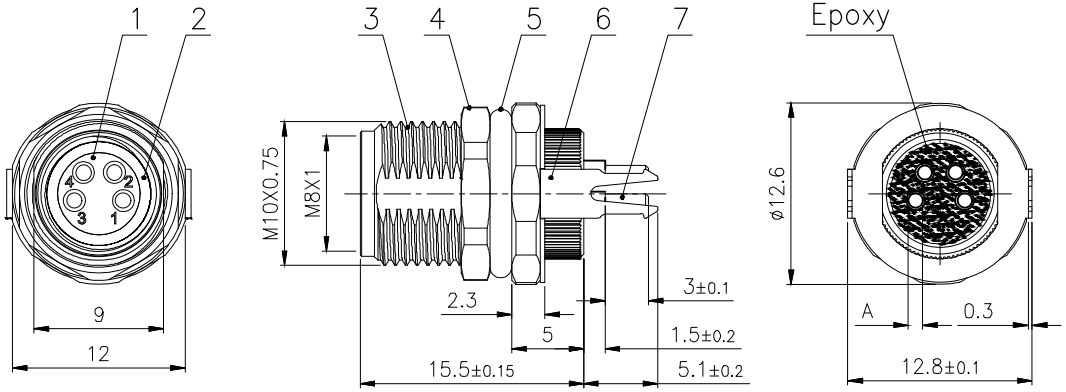

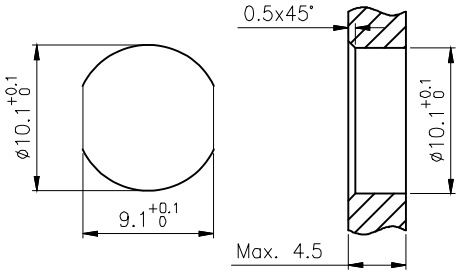

Panel Cut-out Dimensions:

A:
3P 4P 5P Ø1mm
4D P 6P 8P Ø0.6mm

No.	Specification	Material	Treat	Unit	Q'ty
7	Contacts	Brass	Gold plated	pc	3~8
6	Shielded shell	Brass	Nickel plated	pc	1
5	O-ring	Rubber	/	pc	1
4	Nut	Brass	Nickel plated	pc	1
3	Body	Brass	Nickel plated	pc	1
2	O-ring	Rubber	/	pc	1
1	Connector insert	PA66	/	pc	1

-TOLERANCES-
UNLESS OTHERWISE SPECIFIED

UNLESS OTHERWISE SPECIFIED TOLERANCES FOR MILLIMETERS ARE:
0.5 - 8mm ± 0.20mm
8 - 30mm ± 0.25mm
30 -120mm ± 0.30mm

RENHOTEC www.renhotec.com

RENHOTEC GROUP

PART DESCRIPION:
M8 Female,Panel Mount,PCB Type,front fastened

Appr: JIM.KING	P/N: RHT-634-3090				
Check:	Date	Scale	Unit	Type	Page
Draw: DING	2021.12.08	Free	MM	Z	1/1